ENG

BANKO
INDUSTRIAL POWER TOOLS

Turbine grinders - Vane grinders - Robot spindles - Air motors

PATENTED TECHNOLOGY

THE SMALL BEAST

BANKO
INDUSTRIAL POWER TOOLS

The most powerful small hand-held grinder available in the market

Unmatched power-to-weight ratio provide extreme material removal rate with minimum effort which allows new levels of productivity

Benefits

- The most efficient grinding with half the weight for an extreme material removal rate with minimum effort
- Much less insensitivity to variation of pressure, impossible to stall with the right hose and pressure
- Grinding with much less vibration due to grinding of the wheel at the constant right speed
- Oil-less grinding which enables clean surface and more environmentally friendly operation
- Ergonomically shaped and balanced design for less operator fatigue and easy control

Features

- The most efficient 6 stage turbine motor
- Precise stainless steel governor working under any pressure and condition
- Adjustable wheel guard

TURBINE T-21

Order number	GTB21 D12 DW	GTB21 D85 DW	GTB21 D12 DW58	GTB21 D85 DW58
Model	Banko T2 Angle	Banko T2 Angle	Banko T2 Angle	Banko T2 Angle
Max. free speed (rpm)	12000	8500	12000	8500
Spindle thread	M14	M14	5/8"-11	5/8"-11
Rec. max. dia. grinding wheel	125	180	125	180
Maximum Power (kW)	3.5	3.5	3.5	3.5
Weight (kg)	2.2	2.5	2.2	2.5
Lenght (mm)	243	243	243	243
Rec. hose dia. (mm)	13	13	13	13
Air inlet thread	1/2"	1/2"	1/2"	1/2"
Optimal pressure (bar)	6,3	6,3	6,3	6,3
Air consumption max/free (l/sec)	45/14	45/14	45/14	45/14
Exhaust	Lateral	Lateral	Lateral	Lateral
Noise (dB)	78	79	78	79
Vibration	<3 m/s²	<3 m/s²	<3 m/s²	<3 m/s²

We recommend gear grease (article 490-16-103) for relubrication.
Turbine angle grinders have standard grease nipples for grease guns.

THE BEAST

BANKO
INDUSTRIAL POWER TOOLS

The most powerful hand-held grinder available in the market

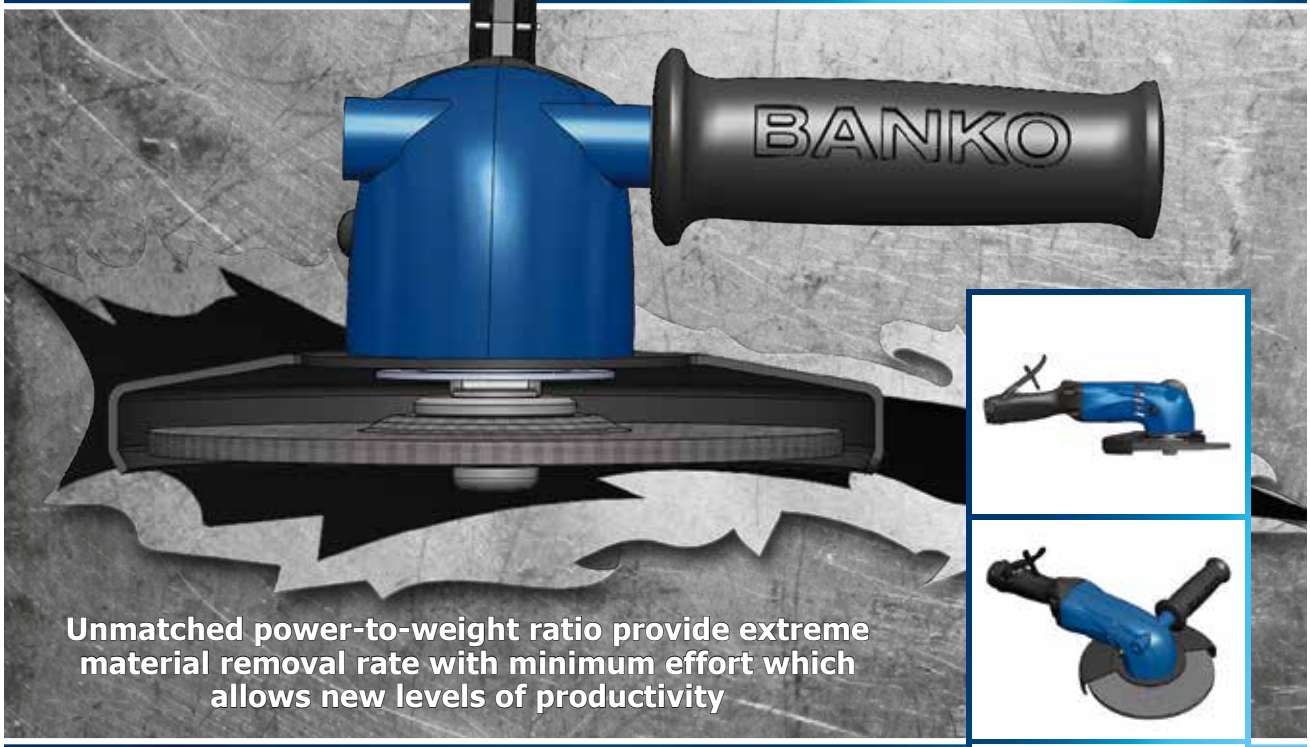

Unmatched power-to-weight ratio provide extreme material removal rate with minimum effort which allows new levels of productivity

Benefits

- The most efficient grinding with half the weight for an extreme material removal rate with minimum effort
- Much less insensitivity to variation of pressure, impossible to stall with the right hose and pressure
- Grinding with much less vibration due to grinding of the wheel at the constant right speed
- Oil-less grinding which enables clean surface and more environmentally friendly operation
- Ergonomically shaped and balanced design for less operator fatigue and easy control

Features

- The most efficient 6 stage turbine motor
- Precise stainless steel governor working under any pressure and condition
- Adjustable wheel guard

TURBINE T-32

Order number	GTB32 A85 DW	GTB32 A66 DW	GTB32 A85 DW58	GTB32 A66 DW58
Model	Banko T32 Angle	Banko T32 Angle	Banko T32 Angle	Banko T32 Angle
Max. free speed (rpm)	8500	6600	8500	6600
Spindle thread	M14	M14	5/8“-11	5/8“-11
Rec. max. dia. grinding wheel	180	230	180	230
Maximum Power (kW)	5.0	5.0	5.0	5.0
Weight (kg)	3.3	3.5	3.3	3.5
Lenght (mm)	313	313	313	313
Rec. hose dia. (mm)	16	16	16	16
Air inlet thread	1/2"	1/2"	1/2"	1/2"
Optimal pressure (bar)	6,3	6,3	6,3	6,3
Air consumption max/free (l/sec)	52/18	52/19	52/18	52/19
Exhaust	Lateral	Lateral	Lateral	Lateral
Noise (dB)	87	87	87	87
Vibration	3,5 m/s²	3,5 m/s²	3,5 m/s²	3,5 m/s²

TURBINE T-32

Order number	GTB32 A60 CW	GTB32 A60 CW58
Model	Banko T32 Angle	Banko T32 Angle
Max. free speed (rpm)	6000	6000
Spindle thread	M14	5/8"-11
Rec. max. dia. grinding wheel	150	150
Maximum Power (kW)	5.0	5.0
Weight (kg)	3.5	3.5
Lenght (mm)	313	313
Rec. hose dia. (mm)	16	16
Air inlet thread	1/2"	1/2"
Optimal pressure (bar)	6,3	6,3
Air consumption max/free (l/sec)	52/19	52/19
Exhaust	Lateral	Lateral
Noise (dB)	87	87
Vibration	3,5 m/s²	3,5 m/s²

We recommend the gear grease (article 490-16-103) for relubrication.
Turbine angle grinders have standard grease nipples for grease guns.
Available on request: Disc washer and nut for cutting

DIE ANGLE M-2

Die angle grinder (DW)

Order number	GAB21 D12 DW	GAB21 D85 DW
Model	Banko M2 DIE Angle	Banko M2 DIE Angle
Max. free speed (rpm)	12000	8500
Spindle thread	M14	M14
Rec. max. dia. grinding wheel	125	180
Maximum Power (kW)	2.2	2.2
Weight (kg)	1.9	1.9
Lenght (mm)	265	265
Rec. hose dia. (mm)	13	13
Air inlet thread	1/2"	1/2"
Optimal pressure (bar)	6,3	6,3
Air consumption max/free (l/sec)	32/16	32/16
Exhaust	Rear	Rear
Noise (dB)	90	90
Vibration	<3,2 m/s²	<3,2 m/s²

ANGLE M-3

Angle grinder (DW)

ANGLE M-4

Angle grinder (DW)

Order number	GAB31 A12 DW	GAB31 A85 DW	GAB41 A85 DW	GAB41 A66 DW
Model	Banko M3 ANGLE	Banko M3 ANGLE	Banko M4 ANGLE	Banko M4 ANGLE
Max. free speed (rpm)	12000	8500	8500	6600
Spindle thread	M14	M14	M14	M14
Rec. max. dia. grinding wheel	125	180	180	230
Maximum Power (kW)	1.8	1.8	2.8	2.8
Weight (kg)	2.6	2.6	3.4	3.4
Lenght (mm)	338	338	337	337
Rec. hose dia. (mm)	19	19	19	19
Air inlet thread	1/2“	1/2“	1/2“	1/2“
Optimal pressure (bar)	6,3	6,3	6,3	6,3
Air consumption max/free (l/sec)	32/16	32/16	50/18	50/18
Exhaust	Lateral	Lateral	Lateral	Lateral
Noise (dB)	91	91	92	92
Vibration	<4,9 m/s²	<4,7 m/s²	<4,8 m/s²	<4,8 m/s²

DIE ANGLE M0

Die angle grinder

Order number	GDB01 A25 CES	GDB01 A18 CES
Model	Banko M0 DIE Angle	Banko M0 DIE Angle
Max. free speed (rpm)	25000	18000
Collet (mm)	6	6
Rec. / max. dia. carbide burr (mm)	12/16	12/16
Rec. / max. dia. mounted point (mm)	20/25	20/25
Maximum Power (kW)	0.75	0.75
Weight (kg)	0.99	0.99
Lenght (mm)	206.9	206.9
Rec. hose dia. (mm)	10	10
Air inlet thread	3/8"	3/8"
Optimal pressure (bar)	6,3	6,3
Air consumption max/free (l/sec)	14/8	14/8
Exhaust	Rear	Rear
Noise (dB)	84	84
Vibration	<2,5 m/s²	<2,5 m/s²

Recommendation for GDB01 DIE and DIE EXTENDED models (article C1-16-01):
1 m supply air hose with coupling and silencer

with collet (CE)

for grinding tools with thread (CW)

DIE ANGLE M-2

Die angle grinder

Order number	GAB21 D12 CE	GAB21 D12 CW
Model	Banko M2 DIE Angle	Banko M2 DIE Angle
Max. free speed (rpm)	12000	12000
Collet (mm)	6 (8)	M12x1 *
Maximum Power (kW)	2.2	2.2
Weight (kg)	1.9	1.9
Lenght (mm)	265	265
Rec. hose dia. (mm)	13	13
Air inlet thread	1/2"	1/2"
Optimal pressure (bar)	6,3	6,3
Air consumption max/free (l/sec)	32/16	32/16
Exhaust	Rear	Rear
Noise (dB)	90	90
Vibration	<3,2 m/s²	<3,2 m/s²

Recommendation for GAB21 DIE ANGLE models (article B2-16-04):
1 m supply air hose with coupling and silencer

Collet: standard delivery 6 mm. Optional dimension of collet available (please specify when ordering)

DIE M-0
Die grinder with collet (CE)

DIE EXTENDED M-0
Die grinder with collet (CE)

Order number	GDB01 D25 CE	GDB01 D18 CE	GDB01 E25 CE	GDB01 E18 CE
Model	Banko M0 DIE	Banko M0 DIE	Banko M0 DIE EXTENDED	Banko M0 DIE EXTENDED
Max. free speed (rpm)	25000	18000	25000	18000
Collet (mm)	6	6	6	6
Rec. / max. dia. carbide burr (mm)	12/16	12/16	12/16	12/16
Rec. / max. dia. mounted point (mm)	20/25	20/25	20/25	20/25
Maximum Power (kW)	0.75	0.75	0.75	0.75
Weight (kg)	0.8	0.8	1.0	1.0
Lenght (mm)	215	215	322	322
Rec. hose dia. (mm)	10	10	10	10
Air inlet thread	3/8“	3/8“	3/8“	3/8“
Optimal pressure (bar)	6,3	6,3	6,3	6,3
Air consumption max/free (l/sec)	14/8	14/8	14/8	14/8
Exhaust	Rear	Rear	Rear	Rear
Noise (dB)	84	85	84	85
Vibration	<2,5 m/s²	<2,5 m/s²	<2,5 m/s²	<2,5 m/s²

Collet: standard delivery 6 mm. Optional dimension of collet available (please specify when ordering)

Recommendation for GDB01 DIE and DIE EXTENDED models (article C1-16-01):
1 m supply air hose with coupling and silencer

DIE M-1
Die grinder with collet (CE)

DIE M-1 VD
Die grinder with collet (CE)

Order number	GDB11 D25 CE	GDB11 D18 CE	GDB11 D25 CE VD	GDB11 D18 CE VD
Model	Banko M1 DIE	Banko M1 DIE	Banko M1 DIE VD	Banko M1 DIE VD
Max. free speed (rpm)	25000	18000	25000	18000
Collet (mm)	6/8	6/8	6/8	6/8
Rec. / max. dia. carbide burr (mm)	12/16	16/16	12/16	16/16
Rec. / max. dia. mounted point (mm)	25/32	32/40	25/32	32/40
Maximum Power (kW)	1.4	1.3	1.4	1.3
Weight (kg)	1.1	1.1	1.1	1.1
Lenght (mm)	234	234	234	234
Rec. hose dia. (mm)	13	13	13	13
Air inlet thread	1/2“	1/2“	1/2“	1/2“
Optimal pressure (bar)	6,3	6,3	6,3	6,3
Air consumption max/free (l/sec)	20/12	18/12	20/12	18/12
Exhaust	Rear	Rear	Rear	Rear
Noise (dB)	90	87	90	87
Vibration	<2,5 m/s²	<2,5 m/s²	<2,5 m/s²	<2,5 m/s²

Collet: standard delivery 6 mm. Optional dimension of collet available (please specify when ordering)

VD - VIBRATION DUMPED MACHINE
for smooth grinding without chatters (only carbide burrs)

Recommendation for GDB11 DIE and DIE EXTENDED models (article B1-16-03):
1 m supply air hose with coupling and silencer

DIE EXTENDED M-1

Die grinder with collet (CE)

Order number	GDB11 E25 CE	GDB11 E18 CE
Model	Banko M1 DIE EXTENDED	Banko M1 DIE EXTENDED
Max. free speed (rpm)	25000	18000
Collet (mm)	6/8	6/8
Rec. / max. dia. carbide burr (mm)	12/16	16/16
Rec. / max. dia. mounted point (mm)	20/32	32/40
Maximum Power (kW)	1.4	1.3
Weight (kg)	1.5	1.5
Lenght (mm)	372	372
Rec. hose dia. (mm)	13	13
Air inlet thread	1/2“	1/2“
Optimal pressure (bar)	6,3	6,3
Air consumption max/free (l/sec)	20/12	18/12
Exhaust	Rear	Rear
Noise (dB)	90	87
Vibration	<2,5 m/s²	<2,5 m/s²

Collet: standard delivery 6 mm. Optional dimension of collet available (please specify when ordering)

DIE EXTENDED M-12
Die grinder with collet (CE)

DIE EXTENDED M-21
Die grinder with collet (CE)

Order number	GDB12 E25 CE	GDB12 E18 CE	GDB21 E18 CE	GDB21 E15 CE
Model	Banko M12 DIE EXTENDED	Banko M12 DIE EXTENDED	Banko M21 DIE EXTENDED	Banko M21 DIE EXTENDED
Max. free speed (rpm)	25000	18000	18000	15000
Collet (mm)	6/8	6/8	6/8	6/8
Rec. / max. dia. carbide burr (mm)	12/16	12/16	12/16	12/16
Rec. / max. dia. mounted point (mm)	20/25	20/25	32/40	32/40
Maximum Power (kW)	1.5	1.4	2.2	2.1
Weight (kg)	1.4	1.4	1.9	1.9
Lenght (mm)	390	390	398	398
Rec. hose dia. (mm)	13	13	13	13
Air inlet thread	1/2“	1/2“	1/2“	1/2“
Optimal pressure (bar)	6,3	6,3	6,3	6,3
Air consumption max/free (l/sec)	20/12	18/12	38/17	36/17
Exhaust	Lateral	Lateral	Lateral	Lateral
Noise (dB)	87	86	88	87
Vibration	<2,5 m/s²	<2,5 m/s²	<3,2 m/s²	<3,2 m/s²

Collet: standard delivery 6 mm. Optional dimension of collet available (please specify when ordering)

DIE EXTENDED M-1

Die grinder with collet (CE) EXTENDED VERSION

Order number	GDB11 2EE 25 CE	GDB11 3EE 25 CE	GDB11 4EE 25 CE	GDB11 5EE 25 CE
Model	Banko M1 DIE EXTENDED	Banko M1 DIE EXTENDED	Banko M1 DIE EXTENDED	Banko M1 DIE EXTENDED
Max. free speed (rpm)	25.000	25.000	25.000	25.000
Collet (mm)	6/8	6/8	6/8	6/8
Rec. / max. dia. carbide burr (mm)	12/16	12/16	12/16	12/16
Rec. / max. dia. mounted point (mm)	20/32	20/32	20/32	20/32
Maximum Power (kW)	1.4	1.4	1.4	1.4
Weight (kg)	2.3	2.7	3.1	3.6
Lenght (mm)	655	795	935	1075
Rec. hose dia. (mm)	13	13	13	13
Air inlet thread	1/2“	1/2“	1/2“	1/2“
Optimal pressure (bar)	6,3	6,3	6,3	6,3
Air consumption max/free (l/sec)	20/12	20/12	20/12	20/12
Exhaust	Rear	Rear	Rear	Rear
Noise (dB)	90	90	90	90
Vibration	<2,5 m/s²	<2,5 m/s²	<2,5 m/s²	<2,5 m/s²

Collet: standard delivery 6 mm. Optional dimension of collet available (please specify when ordering)

Extension - info:

140 mm length per extension part
with spindle thread
3 ball bearings
Connector for spindle
Outside diameter: 28 mm

Available on request:

Other lengths, other speed, 90° angle head,
extension 100 mm length per extension
with outside diameter 22 mm

Recommendation for GDB11 DIE and DIE EXTENDED models (article B1-16-03):
1 m supply air hose with coupling and silencer

DIE EXTENDED M-1

Die grinder for grinding tools with thread (CW)

Order number	GDB11 E25 CW	GDB11 E18 CW
Model	Banko M1 DIE EXTENDED	Banko M1 DIE EXTENDED
Max. free speed (rpm)	25000	18000
Spindle thread	M12x1*	M12x1*
Rec. / max. dia. cone wheel (50 m/s)	32/40	40/50
Maximum Power (kW)	1.4	1.3
Weight (kg)	1.5	1.5
Lenght (mm)	346	346
Rec. hose dia. (mm)	13	13
Air inlet thread	1/2“	1/2“
Optimal pressure (bar)	6,3	6,3
Air consumption max/free (l/sec)	20/12	18/12
Exhaust	Rear	Rear
Noise (dB)	90	87
Vibration	<2,5 m/s²	<2,5 m/s²

*** INFO: 1 machine = 1 wheel adapter free of charge (please specify when ordering)**

DIE EXTENDED M-12
Die grinder for grinding tools with thread (CW)

DIE EXTENDED M-21
Die grinder for grinding tools with thread (CW)

Order number	GDB12 E25 CW	GDB12 E18 CW	GDB21 E18 CW	GDB21 E15 CW
Model	Banko M12 DIE EXTENDED	Banko M12 DIE EXTENDED	Banko M21 DIE EXTENDED	Banko M21 DIE EXTENDED
Max. free speed (rpm)	25000	18000	18000	15000
Spindle thread	M12x1*	M12x1*	M12x1*	M12x1*
Rec. / max. dia. carbide burr (mm)	12/16	12/16	12/16	12/16
Rec. / max. dia. mounted point (mm)	20/25	20/25	32/40	32/40
Maximum Power (kW)	1.5	1.4	2.2	2.1
Weight (kg)	1.4	1.4	1.9	1.9
Lenght (mm)	382	382	390	390
Rec. hose dia. (mm)	13	13	13	13
Air inlet thread	1/2“	1/2“	1/2“	1/2“
Optimal pressure (bar)	6,3	6,3	6,3	6,3
Air consumption max/free (l/sec)	20/12	18/12	38/17	36/17
Exhaust	Lateral	Lateral	Lateral	Lateral
Noise (dB)	87	86	88	87
Vibration	<2,5 m/s²	<2,5 m/s²	<3,2 m/s²	<3,2 m/s²

*** INFO: 1 machine = 1 wheel adapter free of charge (please specify when ordering)**

DIE EXTENDED M-1

Die grinder for grinding tools with thread (CW) EXTENDED VERSION

Order number	GDB11 2EE 25 CW	GDB11 3EE 25 CW	GDB11 4EE 25 CW	GDB11 5EE 25 CW
Model	Banko M1 DIE EXTENDED	Banko M1 DIE EXTENDED	Banko M1 DIE EXTENDED	Banko M1 DIE EXTENDED
Max. free speed (rpm)	25.000	25.000	25.000	25.000
Spindle thread	M12x1*	M12x1*	M12x1*	M12x1*
Rec. / max. dia. cone wheel (50 m/s)	32/40	32/40	32/40	32/40
Maximum Power (kW)	1.4	1.4	1.4	1.4
Weight (kg)	2.6	3.0	3.5	3.9
Lenght (mm)	640	795	935	1075
Rec. hose dia. (mm)	13	13	13	13
Air inlet thread	1/2“	1/2“	1/2“	1/2“
Optimal pressure (bar)	6,3	6,3	6,3	6,3
Air consumption max/free (l/sec)	20/12	20/12	20/12	20/12
Exhaust	Rear	Rear	Rear	Rear
Noise (dB)	90	90	90	90
Vibration	<2,5 m/s²	<2,5 m/s²	<2,5 m/s²	<2,5 m/s²

*** INFO: 1 machine = 1 wheel adapter free of charge (please specify when ordering)**

Extension - info:
140 mm length per extension part
with spindle thread
3 ball bearings
Connector for spindle
Outside diameter: 28 mm

Available on request:
Other lengths, other speed, 90° angle head,
extension 100 mm length per extension
with outside diameter 22 mm

Recommendation for GDB11 DIE and DIE EXTENDED models (article B1-16-03):
1 m supply air hose with coupling and silencer

STRAIGHT M-3
Straight grinder for grinding tools with thread (CW)

STRAIGHT M-4
Straight grinder for grinding tools with thread (CW)

Order number	GSB31 S18 CW	GSB31 S15 CW	GSB41 S12 CW	GSB41 S10 CW
Model	Banko M3 STRAIGHT	Banko M3 STRAIGHT	Banko M4 STRAIGHT	Banko M4 STRAIGHT
Max. free speed (rpm)	18000	15000	12000	10000
Spindle thread	M12x1*	M12x1*	M12x1*	M12x1*
Rec. / max. dia. cone wheel (50 m/s)	40/50	50/63	63/80	80/100
Maximum Power (kW)	2.0	1.9	3.1	3.0
Weight (kg)	2.2	2.2	2.9	2.9
Lenght (mm)	440	440	435	435
Rec. hose dia. (mm)	13	13	19	19
Air inlet thread	1/2“	1/2“	1/2“	1/2“
Optimal pressure (bar)	6,3	6,3	6,3	6,3
Air consumption max/free (l/sec)	32/16	30/16	47/18	47/16
Exhaust	Lateral	Lateral	Lateral	Lateral
Noise (dB)	91	89	89	87
Vibration	<3,5 m/s²	<3,3 m/s²	<4,5 m/s²	<4,3 m/s²

*** INFO: 1 machine = 1 wheel adapter free of charge (please specify when ordering)**
Available on request: Adapter CW (M12x1) – CE (Collet 6 mm). Optional dimension of collet available (please specify when ordering)

STRAIGHT M-4 POWER
Straight grinder for grinding tools with thread (CW)

Order number	GSB41P S10 CW	GSB41P S85 CW	GSB41P S66 CW
Model	Banko M4P Straight	Banko M4P Straight	Banko M4P Straight
Max. free speed (rpm)	10000	8500	6600
Spindle thread	M12 x 1	M12 x 1	M12 x 1
Rec/max dia. cone wheel (50 m/s)	80/100	80/100	80/100
Maximum Power (kW)	3.3	3.3	3.2
Weight (kg)	4.2	4.2	4.2
Lenght (mm)	470	470	470
Rec. hose dia. (mm)	16	16	16
Air inlet thread	1/2"	1/2"	1/2"
Optimal pressure (bar)	6,3	6,3	6,3
Air consumption max/free (l/sec)	52/18	51/18	51/18
Exhaust	Lateral	Lateral	Lateral
Noise (dB)	93	91	89
Vibration	<4,6 m/s²	<4,3 m/s²	<4,1 m/s²

*** INFO: 1 machine = 1 wheel adapter free of charge (please specify when ordering)**
Available on request: Adapter CW (M12x1) – CE (Collet 6 mm). Optional dimension of collet available (please specify when ordering)

STRAIGHT M-3

Straight grinder for straight wheel (SW)

Order number	GSB31 S18 SW	GSB31 S15 SW
Model	Banko M3 STRAIGHT	Banko M3 STRAIGHT
Max. free speed (rpm)	18000	15000
Spindle thread	UNC 5/8x55*	UNC 5/8x55*
Rec. / max. dia. straight wheel (80 m/s)	80/80	80/80
Maximum Power (kW)	2.0	1.9
Weight (kg)	2.2	2.2
Lenght (mm)	472	472
Rec. hose dia. (mm)	13	13
Air inlet thread	1/2“	1/2“
Optimal pressure (bar)	6,3	6,3
Air consumption max/free (l/sec)	32/16	30/16
Exhaust	Lateral	Lateral
Noise (dB)	91	89
Vibration	<3,5 m/s²	<3,3 m/s²

*** INFO: 1 machine = 1 wheel adapter free of charge (please specify when ordering)**

STRAIGHT M-4

Straight grinder for straight wheel (SW)

STRAIGHT M-4 POWER

Straight grinder for straight wheel (SW)

Order number	GSB41 S12 SW	GSB41 S10 SW	GSB41P S10 SW	GSB41P S85 SW	GSB41P S66 SW
Model	Banko M4 STRAIGHT	Banko M4 STRAIGHT	Banko M4P Straight	Banko M4P Straight	Banko M4P Straight
Max. free speed (rpm)	12000	10000	10000	8500	6600
Spindle thread	UNC 5/8x55*	UNC 5/8x55*	UNC 5/8x55 *	UNC 5/8x55 *	UNC 5/8x55 *
Rec. / max. dia. straight wheel (80 m/s)	125/125	125/150	125/150	180/180	230/230
Maximum Power (kW)	3.1	3.0	3.3	3.3	3.2
Weight (kg)	2.9	2.9	4.2	4.2	4.2
Lenght (mm)	467	467	470	470	470
Rec. hose dia. (mm)	19	19	16	16	16
Air inlet thread	1/2“	1/2“	1/2"	1/2"	1/2"
Optimal pressure (bar)	6,3	6,3	6,3	6,3	6,3
Air consumption max/free (l/sec)	50/18	48/18	52/18	51/18	51/18
Exhaust	Lateral	Lateral	Lateral	Lateral	Lateral
Noise (dB)	89	87	93	91	89
Vibration	<4,5 m/s²	<4,3 m/s²	<4,6 m/s²	<4,3 m/s²	<4,1 m/s²

*** INFO: 1 machine = 1 wheel adapter free of charge (please specify when ordering)**

STRAIGHT M-3

Straight grinder with collet (CE)

Order number	GSB31 S18 CE
Model	Banko M3 STRAIGHT
Max. free speed (rpm)	18000
Collet diametar (mm)	6/8
Maximum Power (kW)	2.0
Weight (kg)	2.2
Lenght (mm)	440
Rec. hose dia. (mm)	13
Air inlet thread	1/2“
Optimal pressure (bar)	6,3
Air consumption max/free (l/sec)	32/16
Exhaust	Lateral
Noise (dB)	91
Vibration	<3,5 m/s²

Collet: standard delivery 6 mm. Optional dimension of collet available (please specify when ordering)

STRAIGHT M-4

Straight grinder with collet (CE)

Order number	GSB41 S12 CE	GSB41 S10 CE
Model	Banko M4 STRAIGHT	Banko M4 STRAIGHT
Max. free speed (rpm)	12000	10000
Collet diametar (mm)	6/8	6/8
Maximum Power (kW)	3.1	3.0
Weight (kg)	2.9	2.9
Lenght (mm)	435	435
Rec. hose dia. (mm)	19	19
Air inlet thread	1/2“	1/2“
Optimal pressure (bar)	6,3	6,3
Air consumption max/free (l/sec)	50/18	48/18
Exhaust	Lateral	Lateral
Noise (dB)	89	87
Vibration	<4,5 m/s²	<4,3 m/s²

Collet: standard delivery 6 mm. Optional dimension of collet available (please specify when ordering)

STRAIGHT M-3

Straight grinder with collet (CE) EXTENDED VERSION

Order number	GSB31 2SS 18 CE	GSB31 3SS 18 CE	GSB31 4SS 18 CE	GSB31 5SS 18 CE
Model	Banko M3 Straight	Banko M3 Straight	Banko M3 Straight	Banko M3 Straight
Max. free speed (rpm)	18000	18000	18000	18000
Collet (mm)	6/8	6/8	6/8	6/8
Rec. / max. dia. carbide burr (mm)	16/16	16/16	16/16	16/16
Rec. / max. dia. mounted point (mm)	32/40	32/40	32/40	32/40
Maximum Power (kW)	2.0	2.0	2.0	2.0
Weight (kg)	3.3	3.75	4.2	4.65
Lenght (mm)	735	875	1015	1155
Rec. hose dia. (mm)	13	13	13	13
Air inlet thread	1/2“	1/2“	1/2“	1/2“
Optimal pressure (bar)	6,3	6,3	6,3	6,3
Air consumption max/free (l/sec)	32/16	32/16	32/16	32/16
Exhaust	Lateral	Lateral	Lateral	Lateral
Noise (dB)	91	91	91	91
Vibration	<3,5 m/s²	<3,5 m/s²	<3,5 m/s²	<3,5 m/s²

Collet: standard delivery 6 mm. Optional dimension of collet available (please specify when ordering)

Extension - info:

140 mm length per extension part
with spindle thread
3 ball bearings
Connector for spindle
Outside diameter: 28 mm

Available on request:

Other lengths, other speed, 90° angle head,
extension 100 mm length per extension
with outside diameter 22 mm

STRAIGHT M-3

Straight grinder for grinding tools with thread (CW) EXTENDED VERSION

Order number	GSB31 2EE 18 CW	GSB31 3EE 18 CW	GSB31 4EE 18 CW	GSB31 5EE 18 CW
Model	Banko M3 STRAIGHT	Banko M3 STRAIGHT	Banko M3 STRAIGHT	Banko M3 STRAIGHT
Max. free speed (rpm)	18000	18000	18000	18000
Spindle thread	M12x1*	M12x1*	M12x1*	M12x1*
Rec. / max. dia. cone wheel (50 m/s)	40/50	40/50	40/50	40/50
Maximum Power (kW)	2.0	2.0	2.0	2.0
Weight (kg)	3.3	3.75	4.2	4.65
Lenght (mm)	735	875	1015	1155
Rec. hose dia. (mm)	13	13	13	13
Air inlet thread	1/2“	1/2“	1/2“	1/2“
Optimal pressure (bar)	6,3	6,3	6,3	6,3
Air consumption max/free (l/sec)	32/16	32/16	32/16	32/16
Exhaust	Lateral	Lateral	Lateral	Lateral
Noise (dB)	91	91	91	91
Vibration	<3,5 m/s²	<3,5 m/s²	<3,5 m/s²	<3,5 m/s²

*** INFO: 1 machine = 1 wheel adapter free of charge (please specify when ordering)**

Extension - info:

140 mm length per extension part
with spindle thread
3 ball bearings
Connector for spindle
Outside diameter: 28 mm

Available on request:

Other lengths, other speed, 90° angle head,
extension 100 mm length per extension
with outside diameter 22 mm

STRAIGHT M-4

Straight grinder with collet (CE) EXTENDED VERSION

Order number	GSB41 2SS 12 CE	GSB41 3SS 12 CE	GSB41 4SS 12 CE	GSB41 5SS 12 CE
Model	Banko M4 Straight	Banko M4 Straight	Banko M4 Straight	Banko M4 Straight
Max. free speed (rpm)	12000	12000	12000	12000
Collet (mm)	6/8	6/8	6/8	6/8
Rec. / max. dia. carbide burr (mm)	16/16	16/16	16/16	16/16
Rec./ max. dia. mounted point (mm)	32/40	32/40	32/40	32/40
Maximum Power (kW)	3.1	3.1	3.1	3.1
Weight (kg)	3.8	4.25	4.7	5.15
Lenght (mm)	730	870	1010	1150
Rec. hose dia. (mm)	19	19	19	19
Air inlet thread	1/2“	1/2“	1/2“	1/2“
Optimal pressure (bar)	6,3	6,3	6,3	6,3
Air consumption max/free (l/sec)	50/18	50/18	50/18	50/18
Exhaust	Lateral	Lateral	Lateral	Lateral
Noise (dB)	91	91	91	91
Vibration	<4,5 m/s²	<4,5 m/s²	<4,5 m/s²	<4,5 m/s²

*** INFO: 1 machine = 1 wheel adapter free of charge (please specify when ordering)**

Extension - info:

140 mm length per extension part
with spindle thread
3 ball bearings
Connector for spindle
Outside diameter: 28 mm

Available on request:

Other lengths, other speed, 90° angle head,
extension 100 mm length per extension
with outside diameter 22 mm

STRAIGHT M-4

Straight grinder for grinding tools with thread (CW) EXTENDED VERSION

Order number	GSB41 2SS 12 CW	GSB41 3SS 12 CW	GSB41 4SS 12 CW	GSB41 5SS 12 CW
Model	Banko M4 Straight	Banko M4 Straight	Banko M4 Straight	Banko M4 Straight
Max. free speed (rpm)	12000	12000	12000	12000
Spindle thread	M12x1*	M12x1*	M12x1*	M12x1*
Rec. / max. dia. cone wheel (50 m/s)	63/80	63/80	63/80	63/80
Maximum Power (kW)	3.1	3.1	3.1	3.1
Weight (kg)	3.8	4.25	4.7	5.15
Lenght (mm)	730	870	1010	1150
Rec. hose dia. (mm)	19	19	19	19
Air inlet thread	1/2“	1/2“	1/2“	1/2“
Optimal pressure (bar)	6,3	6,3	6,3	6,3
Air consumption max/free (l/sec)	50/18	50/18	50/18	50/18
Exhaust	Lateral	Lateral	Lateral	Lateral
Noise (dB)	91	91	91	91
Vibration	<4,5 m/s²	<4,5 m/s²	<4,5 m/s²	<4,5 m/s²

*** INFO: 1 machine = 1 adapter free of charge (adapter size - page with adapter - please specify when ordering)**

Extension - info:

140 mm length per extension part
with spindle thread
3 ball bearings
Connector for spindle
Outside diameter: 28 mm

Available on request:

Other lengths, other speed, 90° angle head,
extension 100 mm length per extension
with outside diameter 22 mm

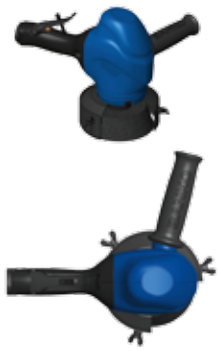

VERTICAL M-5 POWER

Vertical grinder (DW)

Order number	GVB51P V85 DW	GVB51P V66 DW
Model	Banko M5P VERTICAL	Banko M5P VERTICAL
Max. free speed (rpm)	8500	6600
Spindle thread	5/8“-11	5/8“-11
Rec. max. dia. grinding wheel	180	230
Maximum Power (kW)	3.2	3.1
Weight (kg)	4.9	4.9
Lenght (mm)	210	210
Rec. hose dia. (mm)	19	19
Air inlet thread	1/2“	1/2“
Optimal pressure (bar)	6,3	6,3
Air consumption max/free (l/sec)	54/17	52/17
Exhaust	Lateral	Lateral
Noise (dB)	89	88
Vibration	<5,2 m/s²	<4,9 m/s²

Vertical grinder for cup wheels (CW)

GVB51P V66 CW
Banko M5P VERTICAL
6600
5/8“-11
140/115x65
3.1
4.9
210
19
1/2“
6,3
52/17
Lateral
88
<4,9 m/s²

THE BEASTS

FOR ROBOTS

BANKO
INDUSTRIAL POWER TOOLS

The most powerful grinders with compliance units available in the market

Unmatched power provide extreme material removal rate which allows new levels of productivity

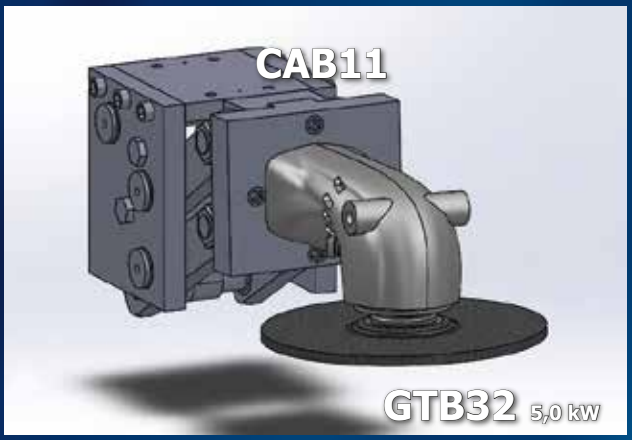

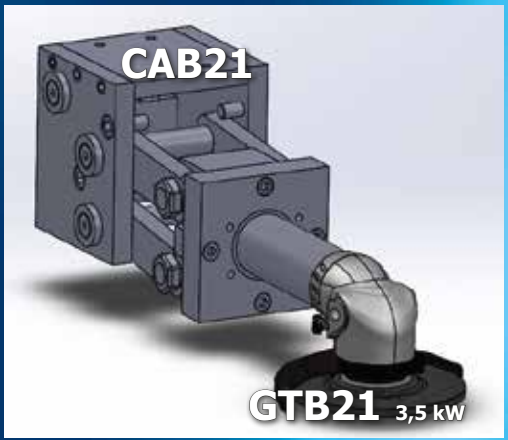

Benefits

- The most efficient grinding for an extreme material removal rate
- Much less insensitivity to variation of pressure, impossible to stall with the right hose and pressure
- Grinding with much less vibration due to grinding of the wheel at the constant right speed
- Oil-less grinding which enables clean surface and more environmentally friendly operation

Features

- The most efficient turbine motor
- Precise stainless steel governor working under any pressure and condition

Spindle with compliance unit

Order number	SDB11 D35 CE	SDB11 D30 CE
Model	Banko T11 Spindle	Banko T11 Spindle
Max. free speed (rpm)	35000	30000
Collet (mm)	6/8	6/8
Rec. / max. dia. carbide burr (mm)	12 / 16	12 / 16
Maximum Power (kW)	1.5	1.5
Rec. hose dia. (mm)	13	13
Air inlet thread	1/2“	1/2“
Optimal pressure (bar)	6,3	6,3
Air consumption max/free (l/sec)	32/10	32/10
Exhaust	Front	Front
Noise (dB)	77	76

Compliance unit	CUB11	CUB11

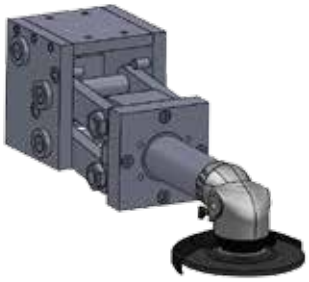

Angle grinder with compliance unit

Order number	GTB21 A12 RW	GTB21 A85 RW	GTB32 A85 RW	GTB32 A66 RW
Model	Banko T21 Angle	Banko T21 Angle	Banko T32 Angle	Banko T32 Angle
Max. free speed (rpm)	12000	8500	8500	6600
Spindle thread	M14	M14	M14	M14
Rec. max. dia. grinding wheel	125	180	180	230
Maximum Power (kW)	3.5	3.5	5.0	5.0
Rec. hose dia. (mm)	13	13	16	16
Air inlet thread	1/2“	1/2“	1/2“	1/2“
Optimal pressure (bar)	6,3	6,3	6,3	6,3
Air consumption max/free (l/sec)	45/14	45/14	52/18	52/19
Exhaust	Lateral	Lateral	Lateral	Lateral
Noise (dB)	78	79	87	87

Compliance unit	CAB21	CAB21	CAB11	CAB11

We recommend the gear grease (article 490-16-103) for relubrication.
Turbine angle grinders have standard grease nipples for grease guns.

VANE MOTOR

Order number	MDB01 D25 CE	MDB11 D25 CE	MDB21 D18 CE	MDB41P D10 CE
Model	Banko M0 motor	Banko M1 motor	Banko M2 motor	Banko M4P motor
Max. free speed (rpm)	25000	25000	18000	10000
Maximum Power (kW)	0.75	1.4	2.2	3.3
Weight (kg)	0.9	1.0	1.7	2.1
Lenght (mm)	190	200	200	180
Rec. hose dia. (mm)	10	13	13	16
Air inlet thread	3/8"	1/2"	1/2"	1/2"
Optimal pressure (bar)	6,3	6,3	6,3	6,3
Air consumption max/free (l/sec)	14/8	20/12	32/16	52/18
Exhaust	Front	Front	Front	Front
Noise (dB)	84	90	90	93
Vibration	<2,5 m/s²	<2,5 m/s²	<3,2 m/s²	<4,6 m/s²

Also available with Max free speed (rpm)	18000	18000	15000	8500

Collet: standard delivery 6 mm. Optional dimension of collet available (please specify when ordering)
Version with CW (internal thread M12 x 1 mm for grinding wheels with thread) also available.
Available on request: Other speed, other length, 90° angle head.

TURBINE MOTOR

Order number	SDB11 D35 CE	SDB21 D35 CE	SDB32 D35 CE	SDB51 D18 CE
Model	Turbine T11	Turbine T21	Turbine T32	Turbine T51
Max. free speed (rpm)	35000	35000	35000	18000
Maximum Power (kW) KW	1.5	3.5	5.0	5.0
Weight (kg)	1.0	1.8	2.2	4.0
Lenght (mm)	180	200	200	300
Rec. hose dia. (mm)	13	13	16	16
Air inlet thread	1/2"	1/2"	1/2"	1/2"
Optimal pressure (bar)	6,3	6,3	6,3	6,3
Air consumption max/free (l/sec)	32/10	45/14	62/18	65/19
Exhaust	Front	Front	Front	Front
Noise (dB)	76	78	87	88
Vibration	<3 m/s²	<3 m/s²	<3,5 m/s²	<3,8 m/s²

Also available with Max free speed (rpm)	25000	30000	30000	15000

Collet: standard delivery 6 mm. Optional dimension of collet available (please specify when ordering)
Version with CW (internal thread M12 x 1 mm for grinding wheels with thread) also available.
Available on request: Other speed, other length, 90° angle head.

BANKO

PATENTED TECHNOLOGY

BANKO INDUSTRIAL POWER TOOLS

Address:
Dubrovačka 19
21000 Split
Croatia

Production:
Hrvatskih velikana 26A
21251 Žrnovnica
Croatia

Contact:
Tel.: + 385 21 540 010
Fax: + 385 21 540 022
info@banko.hr
www.banko.hr

www.banko.hr